INSTALLATION MANUAL

Industrial Bar Faucet

KPF-3127

 © 2022 Kraus USA Plumbing LLC

Congratulations on the purchase of your new Kraus® plumbing fixture!

Please keep the box and packaging materials until your product is completely installed. If you have any questions, require technical assistance or have any problems with your product:

STOP **DO NOT RETURN TO STORE**

Please contact our Customer Service Team
1-800-775-0703 / customerservice@kraususa.com

Have the model number available and retain a copy of your receipt with purchase date for reference.

If for any reason this product does not meet your expectations, please be sure to repack this product in the original box and packaging material to avoid damage during transit.

STOP

Prior to Installation:

- Make sure you have all necessary parts by checking the diagram and parts list. If any part is missing or damaged, please contact Kraus®Customer Service at 800-775-0703 for a replacement.
- Read all instructions and safety warnings and ensure you have all tools, parts, and equipment necessary for a safe installation.
- Turn off the hot and cold water supply at the angle stops and turn on the old faucet to release any built up pressure. Remove existing faucet. Clean sink or countertop to remove any debris, plumber's putty, or silicone.
- Flush angle stops to release any debris prior to installation.
- Pre-drilled hole size requirement: 1 3/8" (min)
- Max countertop thickness: 2 1/8"

Tools Required

Adjustable Wrench

Phillips Screwdriver

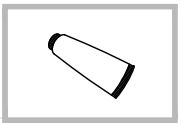
Silicone Sealant

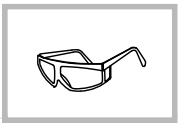
Safety Goggles

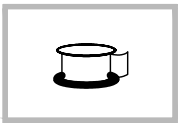
Pipe Tape

Care & Maintenance

To keep the product clean & shining, follow the steps below:

1. Rinse with clean water & dry with a soft cloth
2. Do not clean with soaps, acid, polish, abrasives or harsh cleaners
3. Do not use cloth with a coarse surface
4. Unscrew the aerator and clean when necessary

This installation manual is subject to change without further notice.

Diagram and Parts List

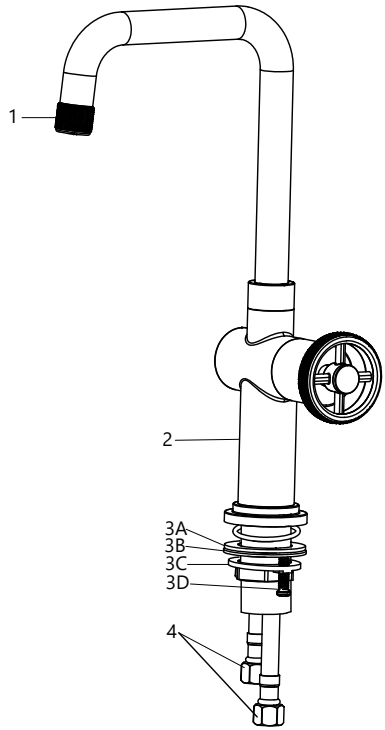

1. Aerator Assembly
2. Faucet Body

3A. Rubber Washer
3B. Metal Washer
3C. Mounting Nut
3D. Mounting Screws

4. Waterlines

For technical assistance or replacement parts, please contact Kraus®

Customer Service and one of our representatives will be happy to help:

Toll-Free: 800-775-0703 or Customerservice@kraususa.com

Faucet Dimensions

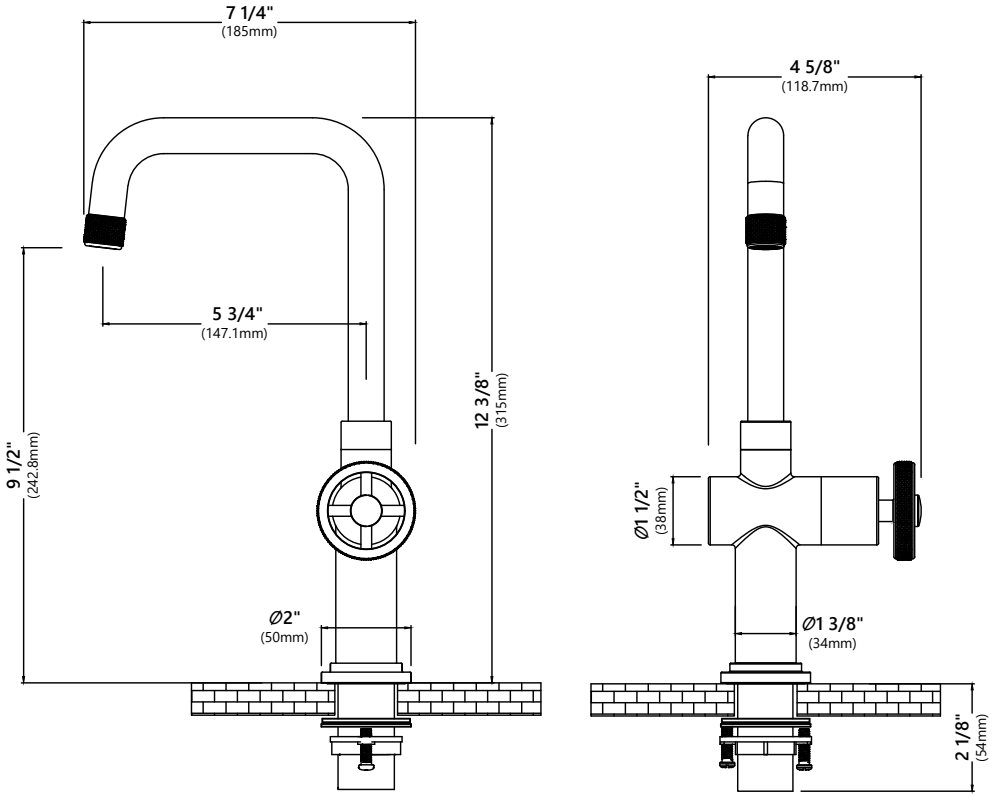

Installer Tip:

Shut off main water supply before installing new faucet.

Step 1. Remove mounting hardware

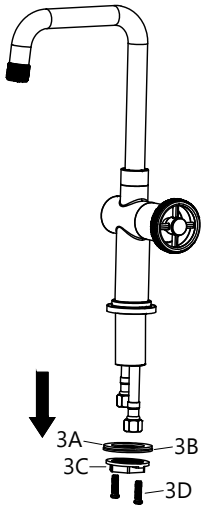

Remove the mounting screws (3D), mounting nut (3C), metal washer (3B) and rubber washer (3A) from the mounting pipe.

Step 2. Install faucet and mounting hardware

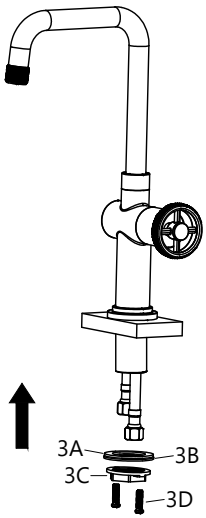

Insert faucet body (2) into hole in countertop or deck plate assembly. Install mounting hardware (3A, B, C & D) from underneath the countertop.

Step 3. Secure mounting hardware

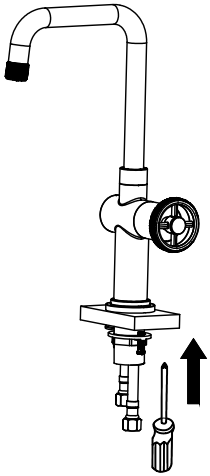

Adjust direction of faucet body (2) so that handle is on right side of faucet. Tighten mounting nut (3C) until snug. Tighten mounting screws (3D) to nut with Phillips screwdriver until snug.

Step 4. Connect waterlines

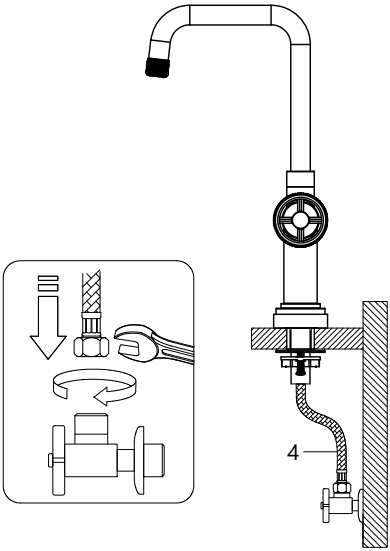

Connect hot and cold copper lines (4) to angle stops. Tighten both ends of waterlines with a wrench until snug. Turn on hot and cold angle stops and check for leaks.

NOTE: Please make sure filter washers are installed before connecting to the main valve.

Step 5. Flush faucet

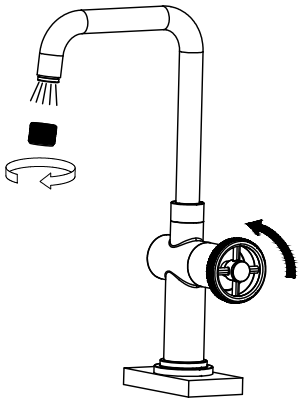

Remove aerator assembly (1) from faucet body (2). Turn faucet on and let the water run for 60 seconds to flush any debris.

Step 6. Check for leaks

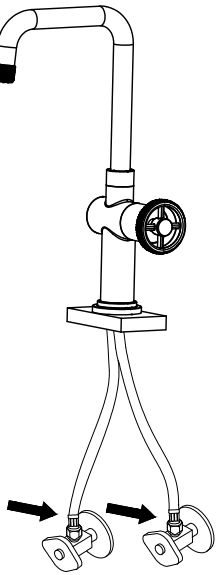

Check for leaks at the connections. Retighten if necessary.

Maintenance - Cartridge Replacement

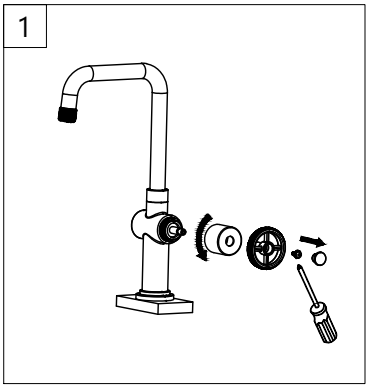

Step 1: Remove the handle button by hand. Loosen the screw with a Phillips screwdriver. Remove the handle and cartridge cap by hand.

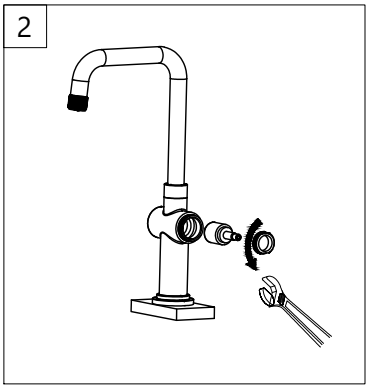

Step 2: Unscrew the locking nut with an adjustable wrench. Remove ceramic disc cartridge.

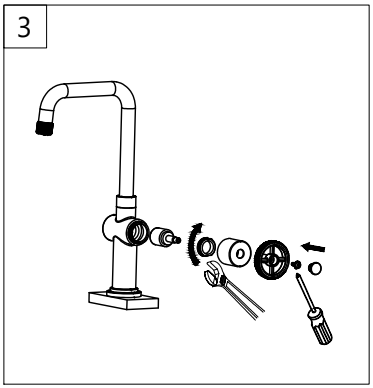

Step 3: Place the new cartridge in the handle seat. Secure the cartridge with the locking nut and assemble the handle.

Replacement Parts

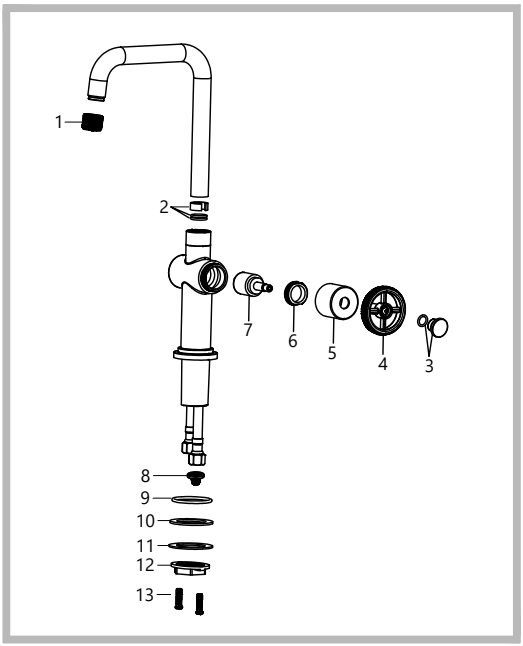

Replacement Parts List	Finish/Color	Part #
1. Aerator Assembly	SFS, MB, BG**	KP44108
2. Spot Seal Kit		KP44109
3. Handle Button	SFS, MB, BG**	KP44032
4. Faucet Handle	SFS, MB, BG**	KP44033
5. Cartridge Cover	SFS, MB, BG**	KP44112
6. Cartridge Nut		KP44111
7. Cartridge		KP44110
8. Filter Washer		KP44022
9. Base O-Ring		KP44102
10. Rubber Washer		KP44098
11. Metal Washer		KP44099
12. Mounting Nut		KP44101
13. Mounting Screws		KP44100

**Denotes faucet component color options:
MB - Matte Black
BG - Brushed Gold
SFS - Spot Free Stainless Steel

Troubleshooting

If you have followed the instructions carefully and your faucet still does not work properly, take the following corrective steps:

PROBLEM	CAUSE	ACTION
Leakage under faucet handle	Locking nut has come loose or cartridge needs to be reseated.	Loosen set screw with phillips screwdriver. Remove handle and unscrew cartridge cover by hand. Tighten locking nut with an adjustable wrench.
Water does not shut off completely	Cartridge may need to be adjusted or replaced.	Loosen set screw with phillips screwdriver. Remove handle and unscrew cartridge cover by hand. Unscrew locking nut with an adjustable wrench. Remove ceramic disc cartridge. Check for cracks, and if O-ring is seated correctly. Reseat cartridge.
Low flow	Aerator may be clogged	Unscrew aerator assembly by hand and turn on water to flush debris.
	The screen filter in the hose connectors is dirty.	Turn off the water supply at water valve and unscrew the hose connectors from water supply lines. Clean the screen in the water lines with hot water, removing any debris or calcium build up.

Codes/Standards Applicable:

NSF/ANSI 372 NSF/ANSI/CAN 61: Q ≤ 1

ASME A112.18.1
1.5GPM 5.6L/min maximum

Faucet

Kraus USA Plumbing, LLC ("Kraus") extends this warranty to the original purchaser for personal household use of the Faucet when purchased from an authorized Kraus dealer and in the location of original installation. This warranty is non-transferable.

Kraus warrants the structure and finish of the Faucet to be free from defects in material and workmanship under normal usage for as long as the original purchaser resides in the residence in which the Faucet was first installed.

Kraus warrants the Faucet's sprayhead assembly (including the engine, aerators, structure, restrictors, back flow preventers, sprayer hoses, braided supply line hoses which encompasses nylon, silicon and stainless steel) of the product to be free from defects in material and workmanship under normal usage for a period of one (1) year from the date of purchase.

Kraus warrants the Faucet's cartridge to be free from defects in material and workmanship under normal usage for a period of five (5) years from the date of purchase.

Any product reported to the authorized dealer or to Kraus as being defective within the warranty period will be repaired or replaced with a product of equal value at the option of Kraus.

Commercial Warranty

Kraus USA Plumbing, LLC ("Kraus") warrants its Products for a period of one (1) year to commercial purchasers of Products used in industrial, commercial and business applications.

Care and Cleaning Instructions

Certain cleaning products may cause damage to a Product's finish and use of the following on the Product will void this warranty:

- Abrasive cleaners such as powders, bleach, ammonia, alcohol or chorine
- Abrasive pads, steel wool or wire brushes

What is Not Covered

This warranty does not cover Products that were discontinued when purchased or display Products, whether such Products were purchased at discount outlets, unauthorized dealers, and/or sold on clearance. This warranty does not cover any free gifts included with purchase.

This warranty does not cover damage resulting from neglect, misuse (including use for an unintended application), abuse, carelessness, accident, hard water or mineral deposits, exposure to corrosive materials, improper maintenance, alteration of the Product, or failure to follow care, cleaning or installation instructions enclosed with your Product. Kraus recommends that all Kraus Products be installed by a fully licensed and insured trade professional with experience in the installation of bathroom and/or kitchen manufactured goods.

How to Make a Warranty Claim

If you are a **consumer purchaser**, please contact a Kraus Customer Service Representative at:
Kraus USA Plumbing, LLC
12 Harbor Park Drive
Port Washington, NY 11050
Toll-free 800-775-0703
Customerservice@kraususa.com

If you are a **plumbing contractor or trade professional**, please contact a Kraus Pro Representative at:
Kraus USA Plumbing, LLC
12 Harbor Park Drive
Port Washington, NY 11050
516-801-8955
Proservice@kraususa.com

If you are an **authorized partner**, please contact a Partner Support Representative at:
Kraus USA Plumbing, LLC
12 Harbor Park Drive
Port Washington, NY 11050
516-801-8954
Partnersupport@kraususa.com

In requesting warranty service, please be ready to provide your proof of purchase and a description of the problem. Shipping charges will be covered for the first (1) year of the warranted replacement part or product (HI, AK, and Puerto Rico shipping charges may apply). International shipping fees are not included.

Limitation on Duration of Implied Warranties

Please note that some states/provinces (including Quebec) do not allow limitations on how long an implied warranty lasts, so the below limitations may not apply to you. TO THE MAXIMUM EXTENT PERMITTED BY APPLICABLE LAW, ANY IMPLIED WARRANTY, INCLUDING THE IMPLIED WARRANTIES OF MERCHANTABILITY AND OF FITNESS FOR A PARTICULAR PURPOSE, IS LIMITED TO THE STATUTORY PERIOD OR THE DURATION OF THIS WARRANTY, WHICHEVER IS SHORTER.

Limitation of Special, Incidental or Consequential Damages

Please note that some states/provinces (including Quebec) do not allow the exclusion or limitation of special, incidental or consequential damages, so the below limitations and exclusions may not apply to you. TO THE MAXIMUM EXTENT PERMITTED BY APPLICABLE LAW, THIS WARRANTY DOES NOT COVER, AND KRAUS USA PLUMBING, LLC SHALL NOT BE LIABLE FOR, ANY SPECIAL, INCIDENTAL OR CONSEQUENTIAL DAMAGES (INCLUDING LABOR CHARGES TO REPAIR, REPLACE, INSTALL OR REMOVE THIS PRODUCT), WHETHER ARISING OUT OF BREACH OF ANY EXPRESS OR IMPLIED WARRANTY, BREACH OF CONTRACT, TORT, OR OTHERWISE.

This warranty gives you specific legal rights, and you may also have other rights which vary from state/province to state/province.

Download the Kraus Care & Maintenance Guide at:
http://www.kraususa.com/maintenance

IMPORTANT

Register Your Kraus Product

Activate Your Warranty

Access Premium Customer Support

Get Product Information

REGISTER TODAY

http://www.kraususa.com/registration

Kraus®

www.kraususa.com