KPF-3125

Industrial Bridge Kitchen Faucet

SPECIFICATION SHEET

Faucet Dimensions
Overall Height: 11 3/8" - 12 3/8" *adjustable
Spout Height: 8 3/8" - 9 3/8" *adjustable
Spout Reach: 9 3/4"

Features
- Bridge Faucet
- Metal Construction
- Lead Free Brass Waterway
- 360° Swivel Spout
- Flow Rate: 1.8 gpm (6.8L/min) @ 60 psi
- 3 or 4 Hole Installation
- Stream Function with Optional Side Sprayer
- Quarter Turn Ceramic Disk Cartridge
- 24" Integrated Nylon Waterlines
- Dome Shaped Screen Washer
- Quick Connect Sprayer Hose
- 13 3/4" Hose Length
- Connections 3/8" Compression
- Max Deck Thickness: 2 1/2"
- TPI of aerator in the Sprayer - M22 x 1

Available Finishes
- Spot Free Stainless Steel
- Matte Black
- Matte Black/Red
- Brushed Gold

CODES/STANDARDS:
Product Certification
ASME A112.18.1/CSA B125.1

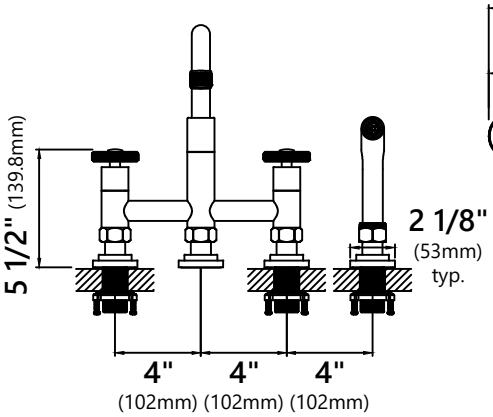

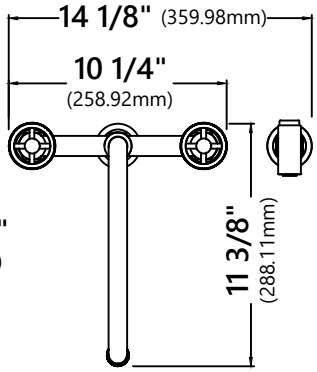

NOTE: Some Kitchen Faucets that do not have a pull out or pull down sprayer may be connected to a portable dishwasher. Pull out and pull down faucets should never be connected to portable dishwashers because potential pressure fluctuations during washing cycles cause hose ruptures or leaks.

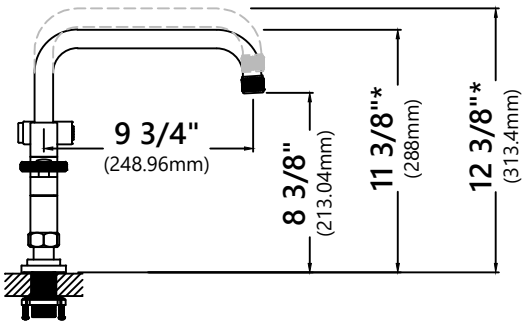

Warranty
Kraus Limited Lifetime Warranty
see website for details **www.kraususa.com**

Kraus USA Plumbing LLC Customer Service
1.800.775.0703 | customerservice@kraususa.com

REV. September 4, 2025